SLM/SLG Linear Actuator with Class I Division 2 Option

The SLM/G rotary motors are available with Class I Division 2 certification for hazardous locations. A hazardous location is defined as a place where concentrations of flammable gases or vapors occur. Electrical equipment that must be installed in these locations is designed and tested to ensure it does not initiate an explosion due to arcing contacts or high surface temperature of equipment.

The SLM/G motors with this option offer the same product performance of the standard product offering as described in the SLM/G section of this catalog. Please see those sections for mechanical specifications.

Class I Division 2 Options include:

- Resolver feedback
- Handwheel

The SLM/G actuators are ideal for operating quarter turn or multi turn valves or shaft driven dampers in hazardous environments. These actuators are directly coupled shaft-to shaft, eliminating ungainly mechanisms needed by the linear motion of pneumatics. Our compact T-lam servo motors outperform any standard motor, providing excellent continuous modulating service.

SLM/SLG
Linear Actuator

163694
Class I, Division 2

Typical Applications

Chemical Processing
Fuel Skids
Oil & Gas Upstream & Downstream
Power Utilities
Basis Weight
Pulp and Paper
Damper Control
Valve Control

Features

T-LAM™ Segmented lamination stator technology
Resolver feedback
High load bearing design
Integrated armature and sungear for SLG models
Class I, Div 2 groups A, B, C & D certified
Terminal box with NPT ports

Terminal Box Wiring Diagram

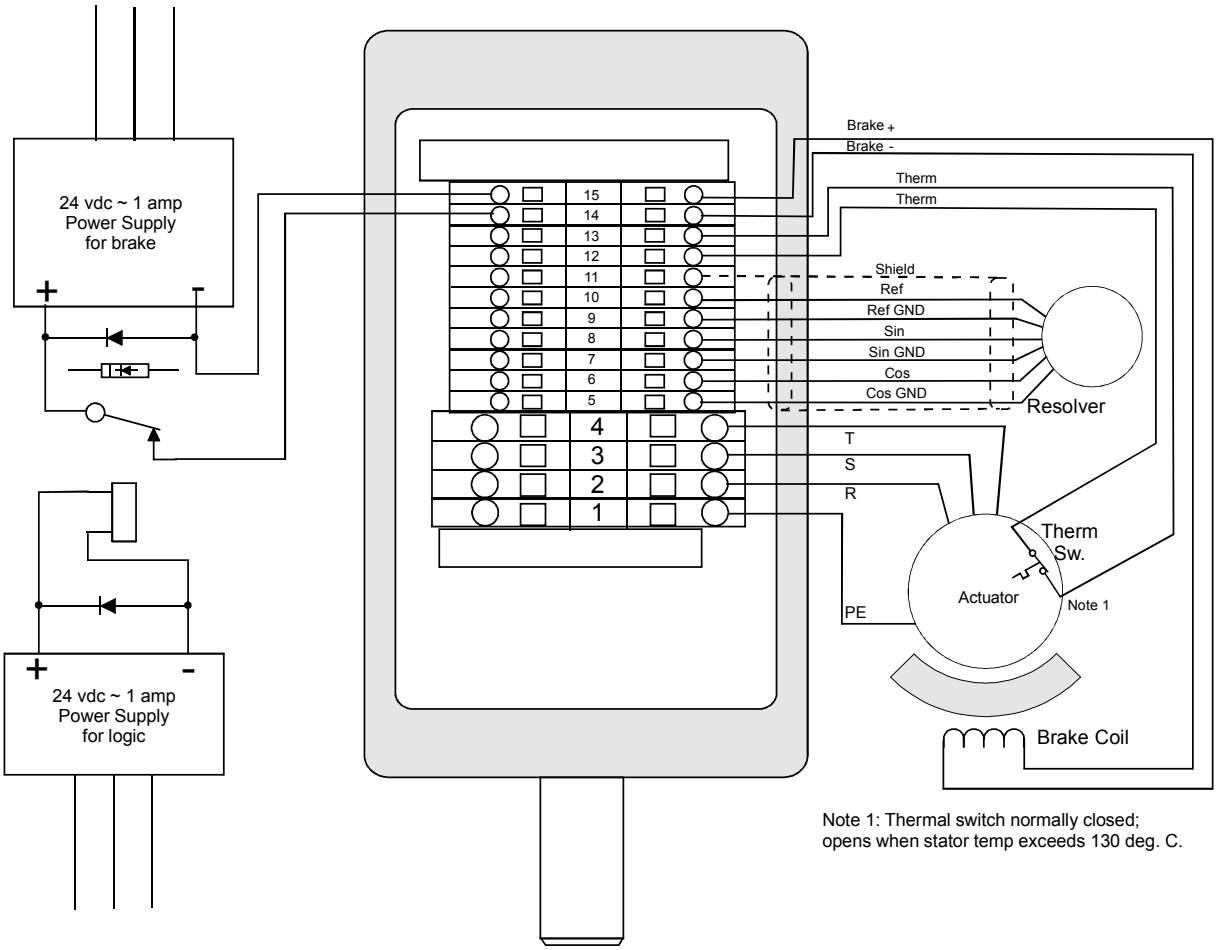

Note 1: Thermal switch normally closed;
opens when stator temp exceeds 130 deg. C.

Ordering Information

Please use the ordering guide from the SLM and SLG (page 147) sections with two callout selections as described below. The required connections selection is "T" and the required options selection is "NI".

SLM/GAAA - BBB - CDEF - GGG - HHH - II - (XX-#####)

T NI

Connections
T = Terminal box with NPT ports
Options
NI = Non-Incendive

Terminal Box Dimensions

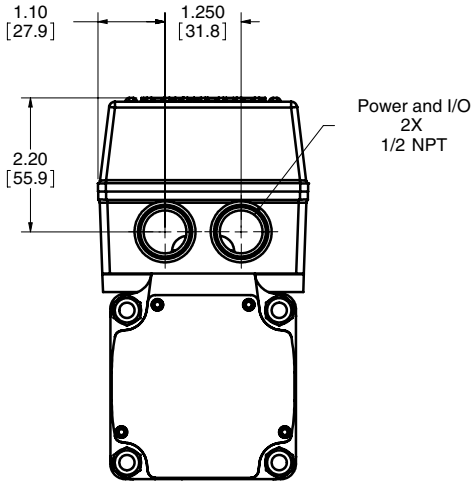

SLM090 Class I Div 2 Option

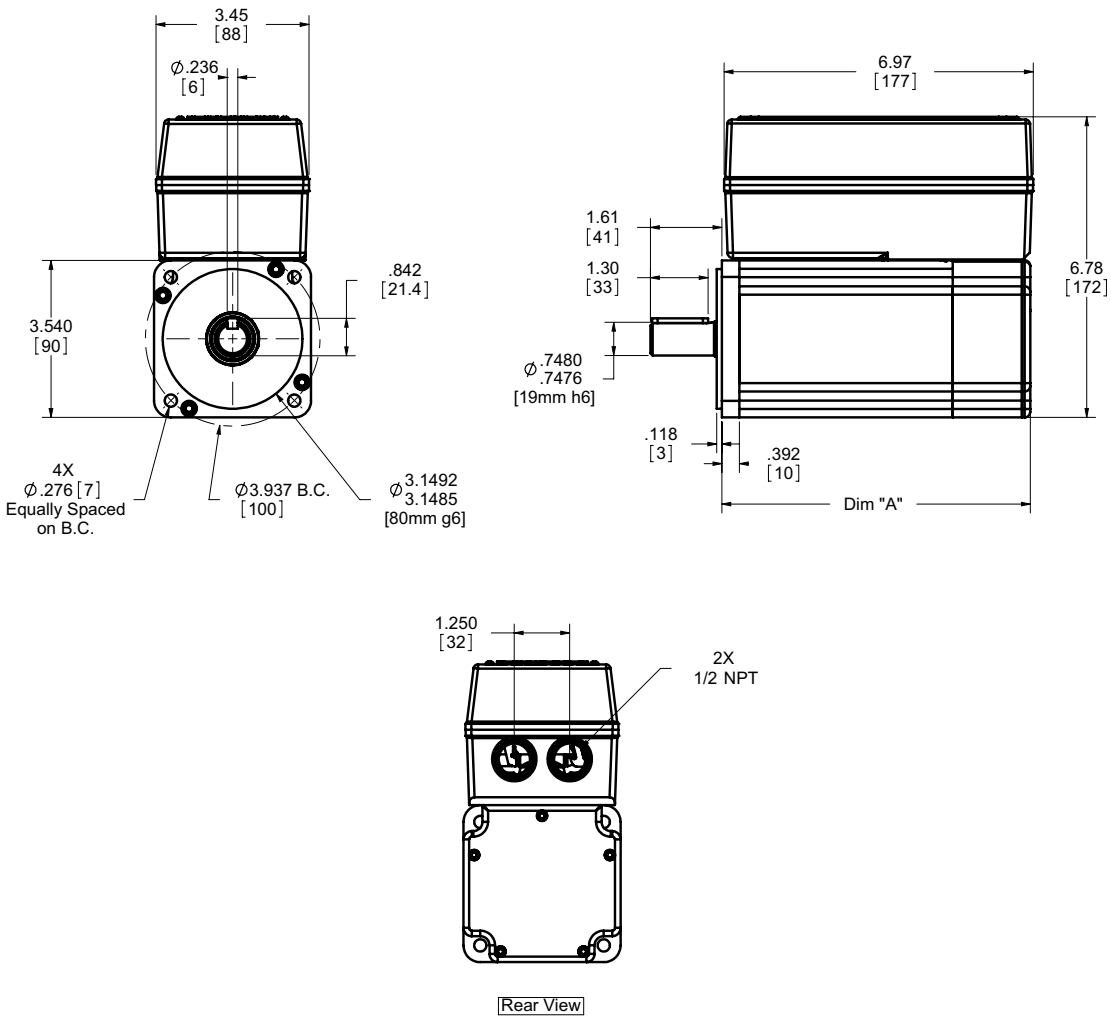

SLM090 Dim. in. (mm)	1 Stack Stator	2 Stack Stator	3 Stack Stator	1 Stack Stator with Brake	2 Stack Stator with Brake	3 Stack Stator with Brake
A	NA	5.65 (144)	6.65 (169)	5.96 (151)	6.96 (177)	7.96 (202)

Face plate edge is not intended for alignment of shaft (use pilot)

Drawings subject to change. Consult Exlar for certified drawings.

SLM115 Class I Div 2 Option

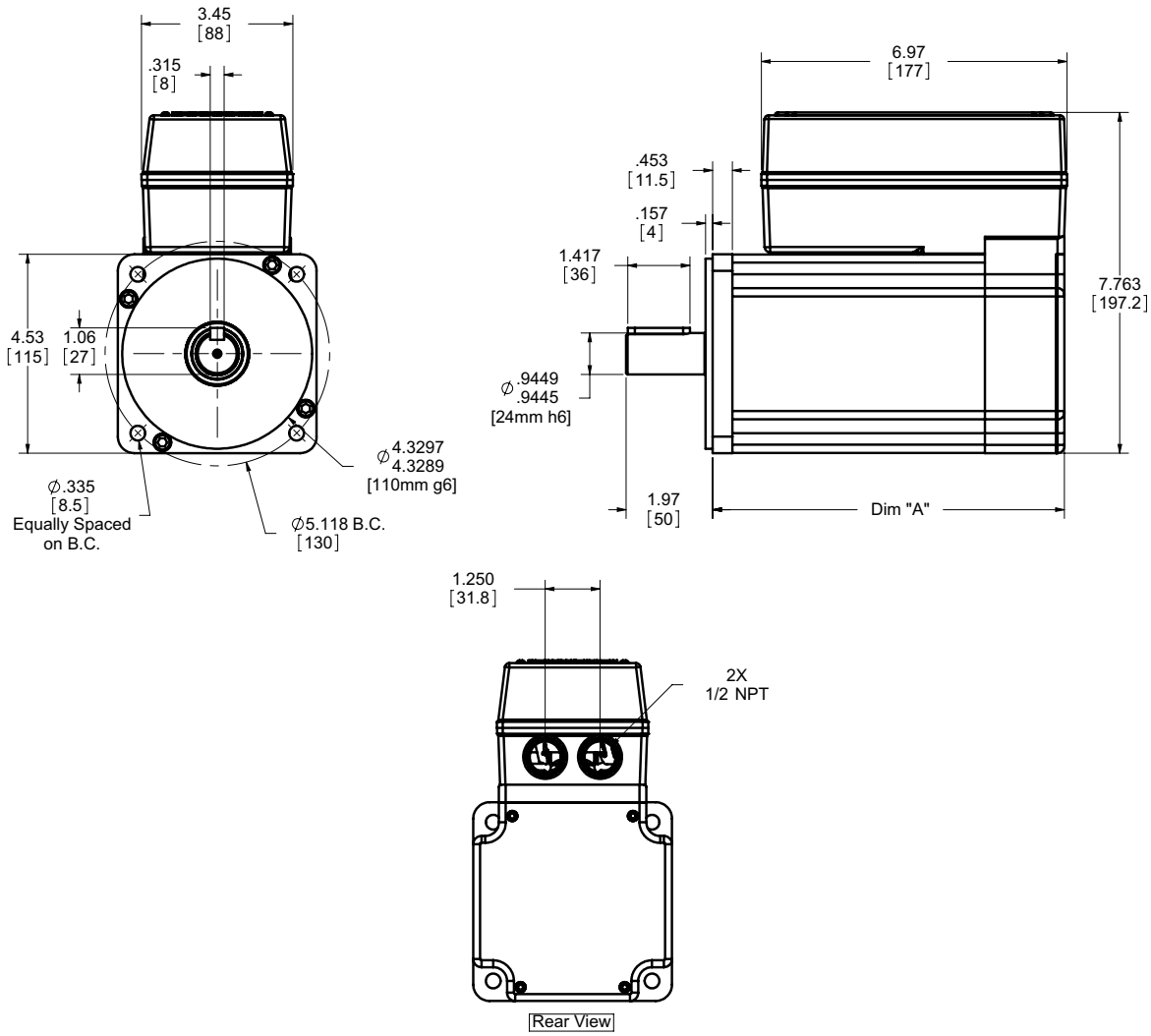

SLM115 Dim in. (mm)	1 Stack Stator	2 Stack Stator	3 Stack Stator	1 Stack Stator with Brake	2 Stack Stator with Brake	3 Stack Stator with Brake
A	6.02 (153)	8.02 (203.7)	10.02 (254.5)	7.75 (196.9)	9.75 (247.7)	11.75 (298.5)

Face plate edge is not intended for alignment of shaft (use pilot)

Drawings subject to change. Consult Exlar for certified drawings.

SLM142 Class I Div 2 Option

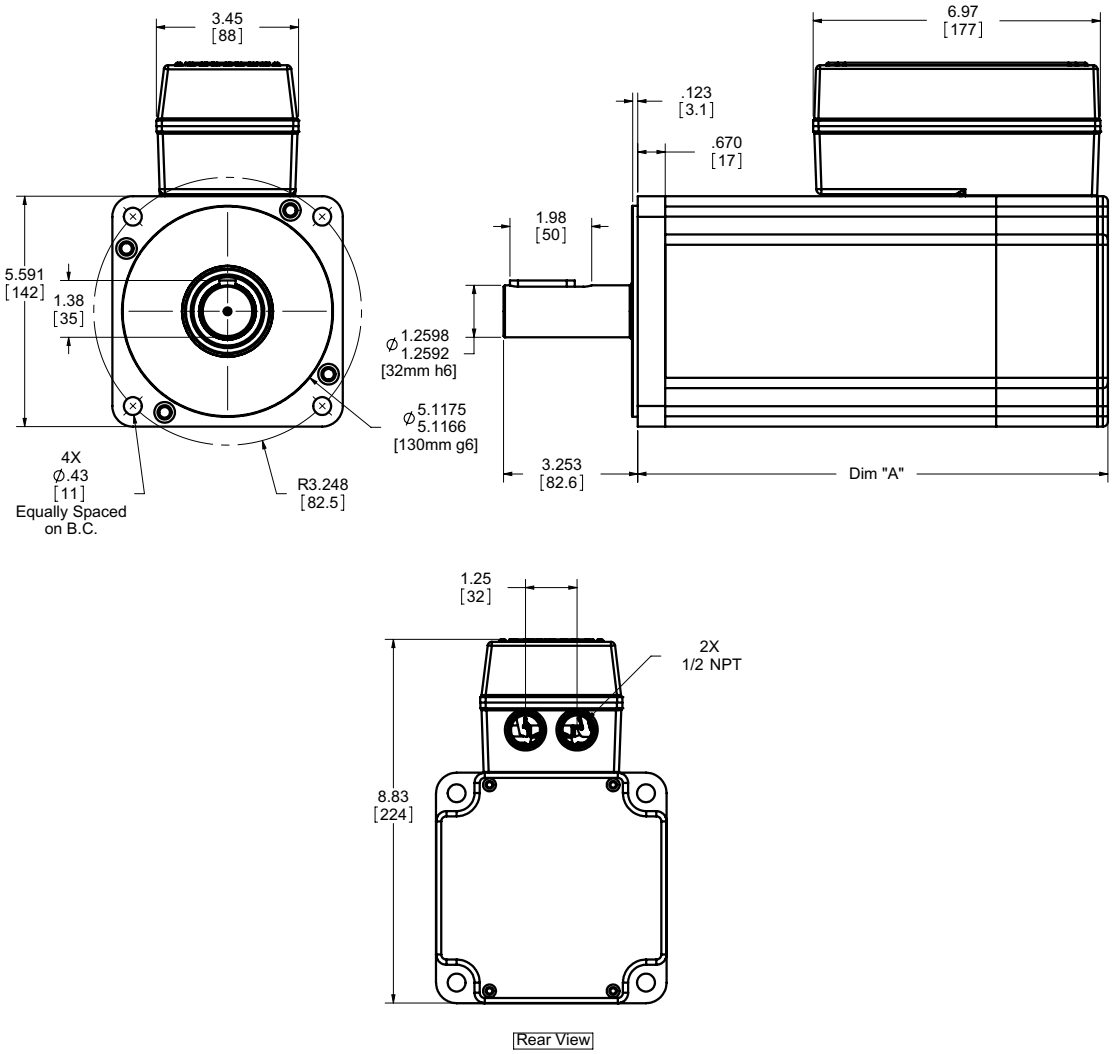

SLM142 Dim. in. (mm)	1 Stack Stator	2 Stack Stator	3 Stack Stator	1 Stack Stator with Brake	2 Stack Stator with Brake	3 Stack Stator with Brake
A	7.87 (199.8)	9.62 (244.2)	11.37 (288.7)	9.53 (241.9)	11.28 (286.4)	13.03 (330.8)

Face plate edge is not intended for alignment of shaft (use pilot)

Drawings subject to change. Consult Exlar for certified drawings.

SLG090 Class I Div 2 Option

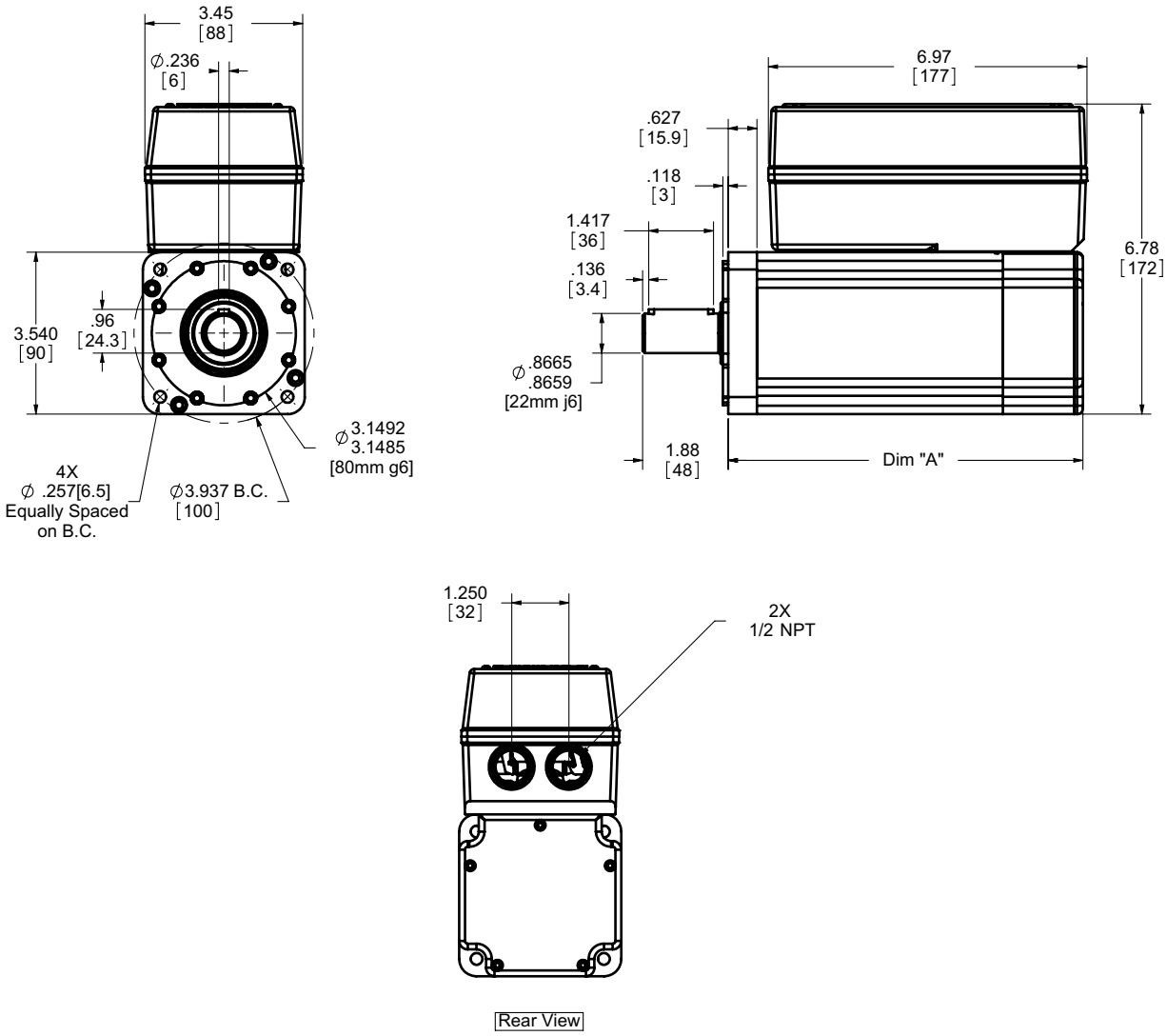

SLG090 Dim. in. (mm)	1 Stack Stator	2 Stack Stator	3 Stack Stator	1 Stack Stator with Brake	2 Stack Stator with Brake	3 Stack Stator with Brake
A 1 Stage Gearhead	7.76 (197)	8.76 (223)	9.96 (248)	9.07 (230)	10.07 (256)	11.07 (281)
A 2 Stage Gearhead	9.03 (229)	10.03 (255)	11.03 (280)	10.34 (263)	11.34 (288)	12.34 (313)

Face plate edge is not intended for alignment of shaft (use pilot)

Drawings subject to change. Consult Exlar for certified drawings.

SLG115 Class I Div 2 Option

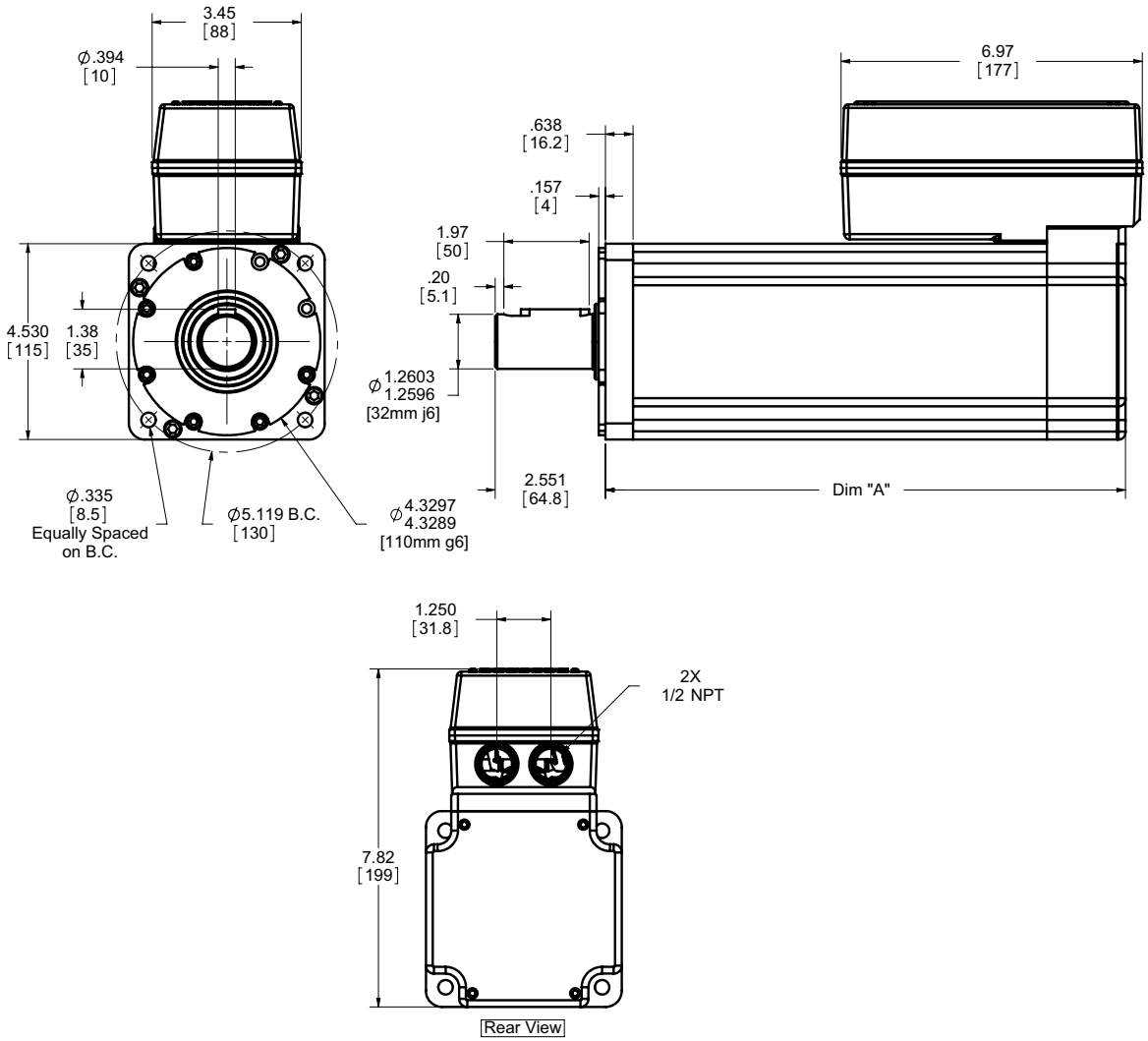

SLG115 Dim. in. (mm)	1 Stack Stator	2 Stack Stator	3 Stack Stator	1 Stack Stator with Brake	2 Stack Stator with Brake	3 Stack Stator with Brake
A 1 Stage Gearhead	10.03 (254.8)	12.03 (305.6)	14.03 (356.4)	11.58 (294.2)	13.58 (345)	15.58 (395.8)
A 2 Stage Gearhead	11.64 (295.7)	13.64 (346.5)	15.64 (397.3)	13.19 (335.1)	15.19 (385.9)	17.19 (436.7)

Face plate edge is not intended for alignment of shaft (use pilot)

Drawings subject to change. Consult Exlar for certified drawings.

SLM/SLG Class I Div 2 Motor Ordering Information

SLM/GAAA - BBB - CDEF - GGG - HIJ - KK - (XX..XX-#####)

SLM/G = Model Series
SLG = SLG Series Servo Gearmotor
SLM = SLM Series Servo Motor (no gear reduction)

AAA = Motor Frame Size
090 = 90 mm
115 = 115 mm
142 = 142 mm

BBB = Gear Reduction Ratio
(leave blank for SLM Motor)
004 = 4:1 Single Reduction
005 = 5:1 Single Reduction
010 = 10:1 Single Reduction
016 = 16:1 Double Reduction
020 = 20:1 Double Reduction
025 = 25:1 Double Reduction
040 = 40:1 Double Reduction
050 = 50:1 Double Reduction
100 = 100:1 Double Reduction

C = Shaft Type
K = Keyed
R = Smooth/round
X = Special shaft

D = Connections
T = Terminal box with NPT ports

E = Coating Options (1)
G = Exlar standard
E = Electroless nickel plated
F = Food grade white
X = Special coating

F = Brake Options
B = Brake
S = Standard no brake

GGG = Feedback Type (Also specify the Amplifier/Drive Model being used when ordering) Resolver Only.
Standard Resolver – Size 15, 1024 line (2048 cts) per rev, 2 pole resolver

Custom Feedback: Please consult application engineering:
XX1 = Wiring and feedback device information must be provided and new feedback callout will be created
AB6 = Allen BradleyRockwell - Std Resolver
AM3 = Advancec Motion Control - Std Resolver
AP1 = API Controls - Std Resolver
BD2 = Baldor - Std Resolver - BSM motor wiring w/M23 connectors for "M" option
BM2 = Baumueller - Std Resolver
BR1 = B&R Automation - Std Resolver
CO2 = Copely Controls - Std Resolver
CT5 = Control Techniques/Emerson - Standard Resolver – FM/UM/EZ motor wiring w/M23 euro connectors for "M" option
DT2 = Delta Tau Data Systems - Std Resolver
EL1 = Elmo Motion Control - Std Resolver
EX4 = Exlar - Std Resolver
IF1 = Infranor - Std Resolver
IN6 = Indramat/Bosch-Rexroth - Std Resolver – MKD/MHD motor wiring w/M23 Euro connectors for "M" option
JT1 = Jetter Technologies - Std Resolver – JH/JL motor wiring w/M23 euro connectors for "M" option
KM5 = Kollmorgen/Danaher - Std Resolver – AKM motor wiring w/M23 euro connectors for "M" option
LZ5 = Lenze/AC Tech - Std Resolver – MCS motor wiring w/ M23 euro connectors connectors for "M" option
MD1 = Modicon - Std Resolver
MG1 = Moog - Std Resolver
MX1 = Metronix - Std Resolver
MN4 = Momentum - Std Resolver - MN motor wiring w/M23 connectors for "M" option
OR1 = Ormec - Std Resolver
PC7 = Parker Compumotor - Std Resolver – SMH motor wiring w/M23 connectors for "M" option – European only
PC0 = Parker Compumotor - Std Resolver – MPP motor wiring w/PS connectors for "M" option – US Only
PS3 = Pacific Scientific - Std Resolver – PMA motor wiring w/M23 connectors for "M" option
SM2 = Siemens - Std Resolver – 1FK7 motor wiring w/M23 connectors for "M" option
SW1 = SEW/Eurodrive - Std Resolver – CM motor wiring w/ M23 euro connectors for "M" option
WD1 = Whedco - Std Resolver

H = Motor Stacks
1 = 1 stack magnets
2 = 2 stack magnets[2]
3 = 3 stack magnets[2]
x = Special

I = Voltage Rating
A = 24 Volt DC
B = 48 Volt DC
C = 120 Volt DC
1 = 115 Volt RMS[2]
3 = 230 Volt RMS
5 = 400 Volt RMS
6 = 460 Volt RMS
X = Special voltage rating – not to exceed 460 Vrms

J = Motor Poles
8 = 8 motor poles

KK = Motor Speed
24 = 2400 rpm, SLM142
30 = 3000 rpm, SLM/G115
40 = 4000 rpm, SLM/G090
01-99 Special speed, consult Exlar

XX .. XX = Options (please list desired options)

Special Options
NI = Non-incendive construction
HW = Side handwheel manual drive including Class I Div 2 limit switch
RD = Rear manual drive
SD = Hex side drive

Housing Options
EN = Electroless nickel plating
HC = Type III anodizing hard coat
XH = Special housing option
XL = Special lubrication
XM = Special motor option

= Part No. Designator for Specials
Optional 5 digit assigned part number to designate unique model numbers for specials.

Notes:
1. These housing may indicate the need for special material main rods or mounting.
2. 115 Vrms is not available on a 2 or 3 stack SLM/G, or a 3 stack SLM/G090.