Sizing and Selection of Exlar Linear and Rotary Actuators

Move Profiles

The first step in analyzing a motion control application and selecting an actuator is to determine the required move profile. This move profile is based on the distance to be traveled and the amount of time available in which to make that move. The calculations below can help you determine your move profile.

Each motion device will have a maximum speed that it can achieve for each specific load capacity. This maximum speed will determine which type of motion profile can be used to complete the move. Two common types of move profiles are trapezoidal and triangular. If the average velocity of the profile, is less than half the max. velocity of the actuator, then triangular profiles can be used. Triangular Profiles result in the lowest possible acceleration and deceleration. Otherwise a trapezoidal profile can be used. The trapezoidal profile below with 3 equal divisions will result in 25% lower maximum speed and 12.5% higher acceleration and deceleration. This is commonly called a 1/3 trapezoidal profile.

The following pages give the required formulas that allow you to select the proper Exlar linear or rotary actuator for your application.

The first calculation explanation is for determining the required thrust in a linear application. The second provides the necessary equations for determining the torque required from a linear or rotary application. For rotary applications this includes the use of reductions through belts or gears, and for linear applications, through screws.

Pages are included to allow you to enter your data and easily perform the required calculations. You can also describe your application graphically and fax it to Exlar for sizing. Reference tables for common unit conversions and motion system constants are included at the end of the section.

Linear Move Profile Calculations

Vmax = max.velocity-in/sec (m/sec)
Vavg = avg. velocity-in/sec (m/sec)
tacc = acceleration time (sec)
tdec = deceleration time (sec)
tcv = constant velocity (sec)
ttotal = total move time (sec)
acc = accel-in/sec^2 (m/sec^2)
dec = decel-in/sec^2 (m/sec^2)
cv = constant vel.-in/sec (m/sec)
D = total move distance-in (m) or revolutions (rotary)

Standard Equations

Vavg = **D** / **t**total
If tacc = **t**dec **Then: V**max = (**t**total/(**t**total-**t**acc)(**V**avg)
and
D = Area under profile curve
D = (1/2(**t**acc+**t**dec)+**t**cv)(**V**max)

Trapezoidal Move Profile

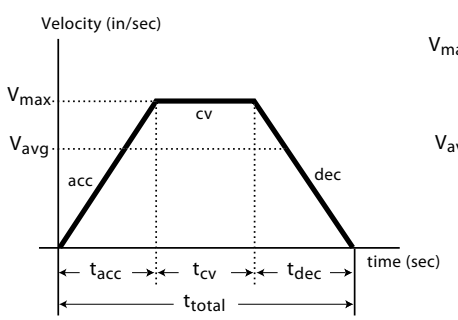

Triangular Move Profile

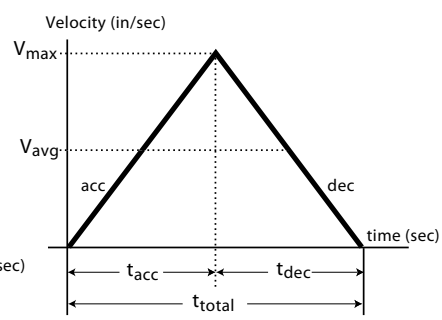

Trapezoidal Equations

If tacc = **t**cv = **t**dec **Then:**
Vmax = 1.5 (**V**avg)
D = (2/3) (**t**total) (**V**max)
acc = dec = $\frac{\mathbf{V}\text{max}}{\mathbf{t}\text{acc}}$

Triangular Equations

If tacc = **t**total/2 **Then:**
Vmax = 2.0 (**V**avg)
D = (1/2) (**t**total) (**V**max)
acc = dec = $\frac{\mathbf{V}\text{max}}{\mathbf{t}\text{acc}}$

Terms and (units)

THRUST = Total linear force-lbf (N)
Ø = Angle of inclination (deg)
Ffriction = Force from friction-lbf (N)
tacc = Acceleration time (sec)
Facc = Acceleration force-lbf (N)
v = Change in velocity-in/sec (m/s)
Fgravity = Force due to gravity-lbf (N)
μ = Coefficient of sliding friction
Fapplied = Applied forces-lbf (N)
(refer to table on page 136 for different materials)
WL = Weight of Load-lbf (N)
g = 386.4: Acceleration of gravity - in/sec^2 (9.8 m/sec^2)

Thrust Calculation Equations

THRUST = **F**friction + [**F**acceleration] + **F**gravity + **F**applied

THRUST = **W**Lμcosø + [(**W**L /386.4) (**v**/tacc)] + **W**Lsinø + **F**applied

Sample Calculations: Calculate the thrust required to accelerate a 200 pound mass to 8 inches per second in an acceleration time of 0.2 seconds. Calculate this thrust at inclination angles(q) of 0˚, 90˚ and 30˚. Assume that there is a 25 pound spring force that is applied against the acceleration.

WL = 200 lbm, v = 8.0 in/sec., **t**a = 0.2 sec., **F**app. = 25 lbf, μ = 0.15

ø = 0˚

THRUST = **W**Lμcosq + [(**W**L /386.4) (**v/t**acc)] + **W**Lsinø + **F**applied
= (200)(0.15)(1) + [(200/386.4)(8.0/0.2)] + (200)(0) + 25

= 30 lbs + 20.73 lbs + 0 lbs + 25 lbs = **75.73 lbs force**

ø = 90˚

THRUST = **W**Lμcosq + [(**W**L /386.4) (**v/t**acc)] + **W**Lsinq + **F**applied
= (200)(0.15)(0) + [(200/386.4)(8.0/0.2)] + (200)(1) + 25

= 0 lbs + 20.73 lbs + 200 lbs + 25 lbs = **245.73 lbs force**

ø = 30˚

THRUST = **W**Lμcosq + [(**W**L /386.4) (**v/t**acc)] + **W**Lsinq + **F**applied
= (200)(0.15)(0.866) + [(200/386.4)(8.0/0.2)] + (200)(0.5) + 25

= 26 lbs + 20.73 lbs + 100 + 25 = **171.73 lbs force**

Thrust Calculations

Definition of thrust:
The thrust necessary to perform a specific move profile is equal to the sum of four components of force. These are the force due to acceleration of the mass, gravity, friction and applied forces such as cutting and pressing forces and overcoming spring forces.

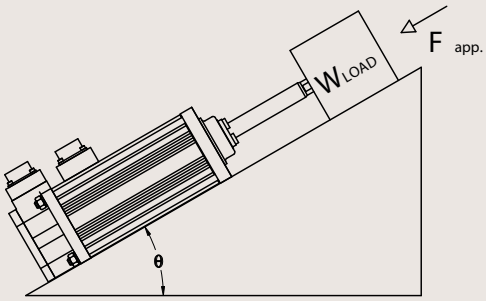

Angle of Inclination

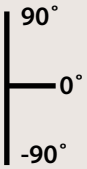

Note: at ø = 0˚
cosø = 1; sinø = 0
at ø = 90˚
cosø = 0; sinø = 1

It is necessary to calculate the required thrust for an application during each portion of the move profile, and determine the worst case criteria. The linear actuator should then be selected based on those values. The calculations at the right show calculations during acceleration which is often the most demanding segment of a profile.

Motor Torque Calculations

When selecting an actuator system it is necessary to determine the required motor torque to perform the given application. These calculations can then be compared to the torque ratings of the given amplifier and motor combination that will be used to control the actuator's velocity and position.

When the system uses a separate motor and screw, like the FT actuator, the ratings for that motor and amplifier are consulted. In the case of the GSX Series actuators with their integral brushless motors, the required torque divided by the torque constant of the motor (Kt) must be less than the current rating of the GSX or SLM motor.

Inertia values and torque ratings can be found in the GSX, FT, I and SLM/SLG Series product specifications.

For the GSX Series the screw and motor inertia are combined.

Motor with screw (GSX, GSM, FT, I & EL)

Motor & motor with reducer (SLM/SLG & ER)

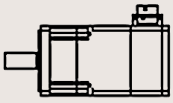

Motor with belt and pulley

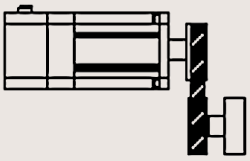

Terms and (units)

λ = Required motor torque, lbf-in (N-m)
λa = Required motor acceleration torque, lbf-in (N-m)
F = Applied force load, non inertial, lbf (N)
S = Screw lead, in (mm)
R = Belt or reducer ratio
TL = Torque at driven load lbf-in (N-m)
vL = Linear velocity of load in/sec (m/sec)
ωL = Angular velocity of load rad/sec
ωm = Angular velocity of motor rad/sec
η = Screw or ratio efficiency
g = Gravitational constant, 386.4 in/s^2 (9.75 m/s^2)
α = Angular acceleration of motor, rad/s^2
m = Mass of the applied load, lb (N)
JL = Reflected Inertia due to load, lbf-in-s^2 (N-m-s^2)
Jr = Reflected Inertia due to ratio, lbf-in-s^2 (N-m-s^2)
Js = Reflected Inertia due to external screw, lbf-in-s^2 (N-m-s^2)
Jm = Motor armature inertia, lbf-in-s^2 (N-m-s^2)
L = Length of screw, in (m)
ρ = Density of screw material, lb/in^3 (kg/m^3)
r = Radius of screw, in (m)
π = pi (3.14159)
C = Dynamic load rating, lbf (N)

Velocity Equations

Screw drive: $\mathbf{V}_L = \omega m * S / 2\pi$ in/sec (m/sec)

Belt or gear drive: $\omega m = \omega_L * R$ rad/sec

Torque Equations

Torque Under Load

Screw drive (GS, FT or separate screw): $\lambda = \dfrac{S \cdot F}{2 \cdot \pi \cdot \eta}$ lbf-in (N-**m**)

Belt and Pulley drive: $\lambda = \mathbf{T}_L / R\,\eta$ lbf-in (N-**m**)

Gear or gear reducer drive: $\lambda = \mathbf{T}_L / R\,\eta$ lbf - in (N-**m**)

Torque Under Acceleration

$\lambda a = (\mathbf{J}_m + \mathbf{J}_R + (\mathbf{J}_s + \mathbf{J}_L)/R^2)\alpha$ lbf-in

α = angular acceleration = ((RPM / 60) x 2π) / $\mathbf{t}_{acc}$, rad/sec^2.

$\mathbf{J}_S = \dfrac{\pi \cdot \mathbf{L} \cdot \rho \times r^4}{2 \cdot g}$ lb - in - s^2 (N - **m** - s^2)

Total Torque per move segment

$\lambda T = \lambda a + \lambda$ lbf-in (N-m)

Mean Load Calculations

For accurate lifetime calculations of a roller screw in a linear application, the cubic mean load should be used. Following is a graph showing the values for force and distance as well as the calculation for cubic mean load. Forces are shown for example purposes. Negative forces are shown as positive for calculation.

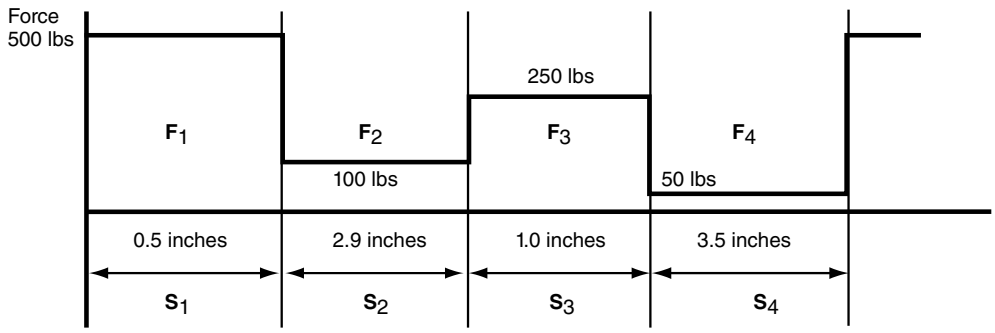

S = Distance traveled during each move segment

Cubic Mean Load Equation

$$\sqrt[3]{\frac{F_1^3 S_1 + F_2^3 S_2 + F_3^3 S_3 + F_4^3 S_4}{S_1 + S_2 + S_3 + S_4}}$$

Value from example numbers is 217 lbs.

Lifetime Calculations

The expected L_{10} life of a roller screw is expressed as the linear travel distance that 90% of the screws are expected to meet or exceed before experiencing metal fatigue. The mathematical formula that defines this value is below. *The life is in millions of inches (mm)*. This standard L_{10} life calculation is what is expected of 90% of roller screws manufactured and is not a guarantee. Travel life estimate is based on a properly maintained screw that is free of contaminants and properly lubricated. Higher than 90% requires de-rating according to the following factors:

95% x 0.62 96% x 0.53
97% x 0.44 98% x 0.33
99% x 0.21

Single (non-preloaded) nut:

$$L_{10} = \left(\frac{C}{F}\right)^3 \times S$$

Note: The dynamic load rating of zero backlash, preloaded screws is 63% of the dynamic load rating of the standard non-preloaded screws. The calculated travel life of a preloaded screw will be 25% of the calculated travel life of the same size and lead of a non-preloaded screw for the same application.

Total Thrust Calculations

Terms and (units)

THRUST = Total linear force-lbf (N)

$\mathbf{F}_{friction}$ = Force from friction-lbf (N)

$\mathbf{F}_{acc}$ = Acceleration force-lbf (N)

$\mathbf{F}_{gravity}$ = Force due to gravity-lbf (N)

$\mathbf{F}_{applied}$ = Applied forces-lbf (N)

386.4 = Acceleration of gravity - in/sec^2 (9.8 m/sec^2)

Variables

Ø = Angle of inclination - deg..... = _____

tacc = Acceleration time - sec..... = _____

v = Change in velocity - in/sec (m/s)..... = _____

μ = Coefficient of sliding friction..... = _____

$\mathbf{W}_L$ = Weight of Load-lbm (kg)..... = _____

$\mathbf{F}_{applied}$ = Applied forces-lbf (N)..... = _____

Thrust Calculation Equations

THRUST = [$\mathbf{F}_{friction}$] + [$\mathbf{F}_{acceleration}$] + $\mathbf{F}_{gravity}$ + $\mathbf{F}_{applied}$

THRUST = [$\mathbf{W}_L$ x μ x cosø] + [($\mathbf{W}_L$ /386.4) x (**v** / $\mathbf{t}_{acc}$)] + $\mathbf{W}_L$sinø + $\mathbf{F}_{applied}$

THRUST = [( )x( )x( )] + [(/386.4) x (/)] + [( ) ( )] + ( )

THRUST = [ ] + [( ) x ( )] + [ ] + ( )

= _____ lbf.

Calculate the thrust for each segment of the move profile. Use those values in calculations below.
Use the units from the above definitions.

Cubic Mean Load Calculations

$$\sqrt[3]{\frac{\mathbf{F}_1^3\,\mathbf{S}_1 + \mathbf{F}_2^3\,\mathbf{S}^2 + \mathbf{F}_3^3\,\mathbf{S}_3 + \mathbf{F}_4^3\,\mathbf{S}_4}{\mathbf{S}_1 + \mathbf{S}_2 + \mathbf{S}_3 + \mathbf{S}_4}}$$

$\mathbf{F}_1$= _____	$\mathbf{S}_1$= _____	$\mathbf{F}_1^3\,\mathbf{S}_1$ = _____
$\mathbf{F}_2$= _____	$\mathbf{S}_2$= _____	$\mathbf{F}_2^3\,\mathbf{S}_2$ = _____
$\mathbf{F}_3$= _____	$\mathbf{S}_3$= _____	$\mathbf{F}_3^3\,\mathbf{S}_3$ = _____
$\mathbf{F}_4$= _____	$\mathbf{S}_4$= _____	$\mathbf{F}_4^3\,\mathbf{S}_4$ = _____

Move Profiles may have more or less than four components. Adjust your calculations accordingly.

Torque Calculations

Terms and (units)

λ = Torque, lb-in (N-m) ..... = ----------

F = Applied Load, non inertial, lbf (N) ..... = ----------

S = Screw lead, in (m) ..... = ----------

η = Screw or ratio efficiency (~85% for roller screws) ..... = ----------

g = Gravitational constant, 386 in/s2 (9.8 m/s2) ..... = ----------

α = Acceleration of motor, rad/s2 ..... = ----------

R = Belt or reducer ratio ..... = ----------

$\mathbf{T}_L$ = Torque at driven load, lbf-in (N-m) ..... = ----------

$\mathbf{V}_L$ = Linear velocity of load, in/sec (m/sec) ..... = ----------

ω_L = Angular velocity of load, rad/sec ..... = ----------

ω_m = Angular velocity of motor, rad/sec ..... = ----------

m = Mass of the applied load, lbm (kg) ..... = ----------

$\mathbf{J}_R$ = Reflected Inertia due to ratio, lb-in-s2 (N-m-s2) ..... = ----------

$\mathbf{J}_S$ = Reflected Inertia due to screw, lb-in-s2 (N-m-s2) ..... = ----------

$\mathbf{J}_L$ = Reflected Inertia due to load, lb-in-s2(N-m-s2) ..... = ----------

$\mathbf{J}_M$ = Motor armature inertia, lb-in-s2 (N-m-s2) ..... = ----------

π = pi ..... = 3.14159

$\mathbf{K}_t$ = Motor Torque constant, lb-in/amp (N-m/amp) ..... = ----------

* For the GS Series $\mathbf{J}_S$ and $\mathbf{J}_M$ are one value from the GS Specifications.

Torque Equations

Torque From Calculated Thrust.

$\lambda = \frac{SF}{2 \cdot \pi \cdot \eta}$ lb - in (N - m) = ( ) x ( )/2π (0.85) = ( ) x ( )/5.34 = ----------

Torque Due To Load, Rotary.

Belt and pulley drive: $\lambda = \mathbf{T}_L / R\,\eta$ lbf-in (N-**m**)

Gear or gear reducer drive: $\lambda = \mathbf{T}_L / R\eta$ lbf-in (N-**m**)

Torque During Acceleration due to screw, motor, load and reduction, linear or rotary.

$I = (\mathbf{J}_m + (\mathbf{J}_S + \mathbf{J}_L) / R^2)\,\alpha$ lb-in (N-**m**) = [( ) + (+) / ( )] ( ) = ----------

Total Torque = Torque from calculated Thrust + Torque due to motor, screw and load

( ) + ( ) + ( ) = _____

Motor Current = $\lambda / \mathbf{K}_t$ = ( ) / ( ) = _____

Exlar Application Worksheet

FAX to:
Exlar Corporation
(952) 368-4877
Attn: Applications Engineering

Date: _____ Company Name: _____

Address: _____

City: _____ State: _____ Zip Code: _____

Phone: _____ Fax: _____

Contact: _____ Title: _____

Sketch/Describe Application

Velocity vs. Time

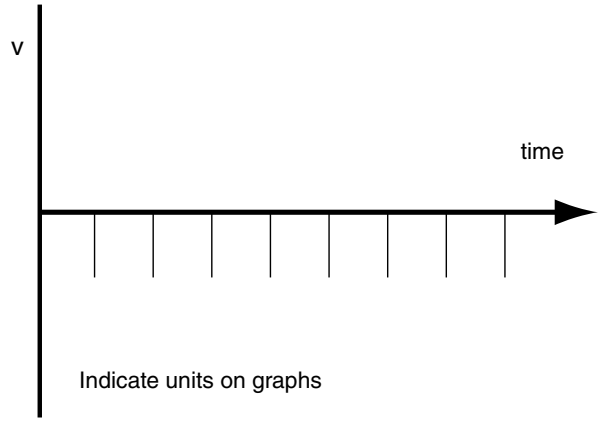

Force or Torque vs. Distance

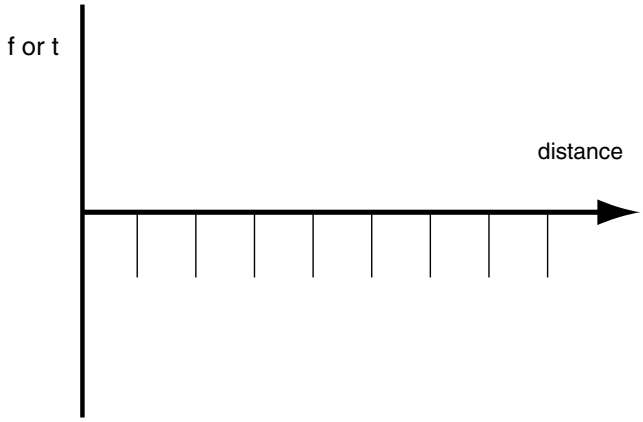

Exlar Application Worksheet

Date: _____ Contact: _____ Company: _____

Stroke & Speed Requirements

Maximum Stroke Needed	_____	inches (mm), revs
Index Stroke Length	_____	inches (mm), revs
Index Time	_____	sec
Max Speed Requirements	_____	in/sec (mm/sec), revs/sec
Min Speed Requirements	_____	in/sec (mm/sec), revs/sec
Required Positional Accuracy	_____	inches (mm), arc min

Load & Life Requirements

Gravitational Load	_____	lb (N)
External Applied Load	_____	lbf (N)
Inertial Load	_____	lbf (N)
Friction Load	_____	lbf (N)
Rotary Inertial Load	_____	lbf-in-sec^2 (Kg-m^2)
or rotary mass, radius of gyr. lb (kg)	_____	in (mm)
Side Load (rot. or lin. actuator)	_____	lb (N)

Force Direction _____ Extend _____ Retract _____ Both

Actuator Orientation _____ Vertical Up _____ Vertical Down _____ Horizontal

_____ Fixed Angle _____ Degrees from Horizontal

_____ Changing Angle _____ to _____

Cycling Rate	_____	Cycles/min/hr/day
Operating Hours per Day	_____	Hours
Life Requirement	_____	Cycles/hr/inches/mm

Configuration

Mounting: _____ Side _____ Flange _____ Ext Tie Rod _____ Clevis _____ Trunnion

Rod End: _____ Male _____ Female _____ Sph Rod Eye _____ Rod Eye _____ Clevis

Rod Rotation Limiting: _____ Appl Inherent _____ External Required

Holding Brake Required: _____ Yes _____ No

Cable Length: _____ ft (m)

Rotary Inertia To obtain a conversion from A to B, multiply by the value in the table.

B	Kg-m^2	Kg-cm^2	g-cm^2	kgf-m-s^2	kgf-cm-s^2	gf-cm-s^2	oz-in^2	ozf-in-s^2	lb-in^2	lbf-in-s^2	lb-ft^2	lbf-ft-s^2
A												
Kg-m^2	1	10^4	10^7	0.10192	10.1972	1.01972×10^4	5.46745×10^4	1.41612×10^2	3.41716×10^3	8.850732	23.73025	0.73756
Kg-cm^2	10^{-4}	1	10^3	1.01972×10^5	1.01972×10^3	1.01972	5.46745	1.41612×10^{-2}	0.341716	8.85073×10^{-4}	2.37303×10^{-3}	7.37561×10^{-5}
g-cm^2	10^{-7}	10^{-3}	1	1.01972×10^{-8}	1.01972×10^{-6}	1.01972×10^{-3}	5.46745×10^{-3}	1.41612×10^{-5}	3.41716×10^{-4}	8.85073×10^{-7}	2.37303×10^{-6}	7.37561×10^{-8}
kgf-m-s^2	9.80665	9.80665×10^4	9.80665×10^7	1	10^2	10^5	5.36174×10^5	1.388674×10^3	3.35109×10^4	86.79606	2.32714×10^2	7.23300
kgf-cm-s^2	9.80665×10^{-2}	9.80665×10^2	9.80665×10^5	10^{-2}	1	10^5	5.36174×10^3	13.8874	3.35109×10^{-2}	0.86796	2.32714	7.23300×10^{-2}
gf-cm-s^2	9.80665x10-5	0.980665	9.80665×10^2	10^{-5}	10^{-3}	1	5.36174	1.38874×10^{-2}	0.335109	8.67961×10^{-4}	2.32714×10^{-3}	7.23300×10^{-5}
oz-in^2	1.82901×10^{-5}	0.182901	1.82901×10^2	1.86505×10^{-6}	1.86505×10^{-4}	0.186506	1	2.59008×10^{-3}	6.25×10^{-2}	1.61880×10^{-4}	4.34028×10^{-4}	1.34900×10^{-3}
oz-in-s^2	7.06154×10^{-3}	70.6154	7.06154×10^4	7.20077×10^4	7.20077×10^{-2}	72.0077	3.86089×10^2	1	24.13045	6.25×10^{-2}	0.167573	5.20833×10^{-4}
lb-in^2	2.92641×10^{-4}	2.92641	2.92641×10^3	2.98411×10^5	2.98411×10^3	2.98411	16	4.14414×10^2	1	2.59008×10^{-3}	6.94444×10^{-3}	2.15840×10^{-4}
lbf-in-s^2	0.112985	1.129×10^3	1.12985×10^6	1.15213×10^2	1.15213	1.51213×10^3	6.1774×10^3	16	3.86088×10^2	1	2681175	8.3333×10^{-2}
lbf-ft^2	4.21403×10^{-2}	4.21403×10^2	4.21403×10^5	4.29711×10^3	0.429711	4.297114	2.304×10^3	5.96755	144	0.372971	1	3.10809×10^{-2}
lbf-ft-s^2	1.35583	1.35582×10^4	1.35582×10^7	0.138255	13.82551	1.38255×10^4	7.41289×10^4	192	4.63306×10^3	12	32.17400	1

Torque To obtain a conversion from A to B, multiply A by the value in the table.

B	N-m	N-cm	dyn-cm	Kg-m	Kg-cm	g-cm	oz-in	ft-lb	in-lb
A									
N-m	1	10^{-2}	10^7	0.109716	10.19716	1.019716×10^4	141.6199	0.737562	8.85074
N-cm	102	1	10^5	1.019716×10^3	0.1019716	1.019716×10^2	1.41612	7.37562×10^{-3}	8.85074×10^{-2}
dyn-cm	10-7	10^{-5}	1	1.019716×10^{-8}	1.019716×10^{-6}	1.019716×10^{-3}	1.41612×10^{-5}	7.2562×10^{-8}	8.85074×10^{-7}
Kg-m	9.80665	980665×10^2	9.80665×10^7	1	10^2	10^5	1.38874×10^3	7.23301	86.79624
Kg-cm	9.80665x10-2	9.80665	9.80665×10^5	10^{-2}	1	10^3	13.8874	7.23301×10^{-2}	0.86792
g-cm	9.80665x10-5	9.80665×10^{-3}	9.80665×10^2	10^{-5}	10^{-3}	1	1.38874×10^{-2}	7.23301×10^{-5}	8.679624×10^{-4}
oz-in	7.06155x10-3	0.706155	7.06155×10^4	7.20077×10^{-4}	7.20077×10^{-2}	72,077	1	5.20833×10^{-3}	6.250×10^{-2}
ft-lb	1.35582	1.35582×10^2	1.35582×10^7	0.1382548	13.82548	1.382548×10^4	192	1	12
in-lb	0.113	11.2985	1.12985×10^6	1.15212×10^{-2}	1.15212	1.15212×10^3	16	8.33333×10^{-2}	1

Common Material Densities

Material	oz/in^3	gm/cm^3
Aluminum (cast or hard drawn)	1.54	2.66
Brass (cast or rolled)	4.80	8.30
Bronze (cast)	4.72	8.17
Copper (cast or hard drawn)	5.15	8.91
Plastic	0.64	1.11
Steel (hot or cold rolled)	4.48	7.75
Wood (hard)	0.46	0.80
Wood (soft)	0.28	0.58

Coefficients of Sliding Friction

Materials in contact	μ
Steel on Steel (dry)	0.58
Steel on Steel (lubricated)	0.15
Aluminum on Steel	0.45
Copper on Steel	0.36
Brass on Steel	0.44
Plastic on Steel	0.20
Linear Bearings	0.001